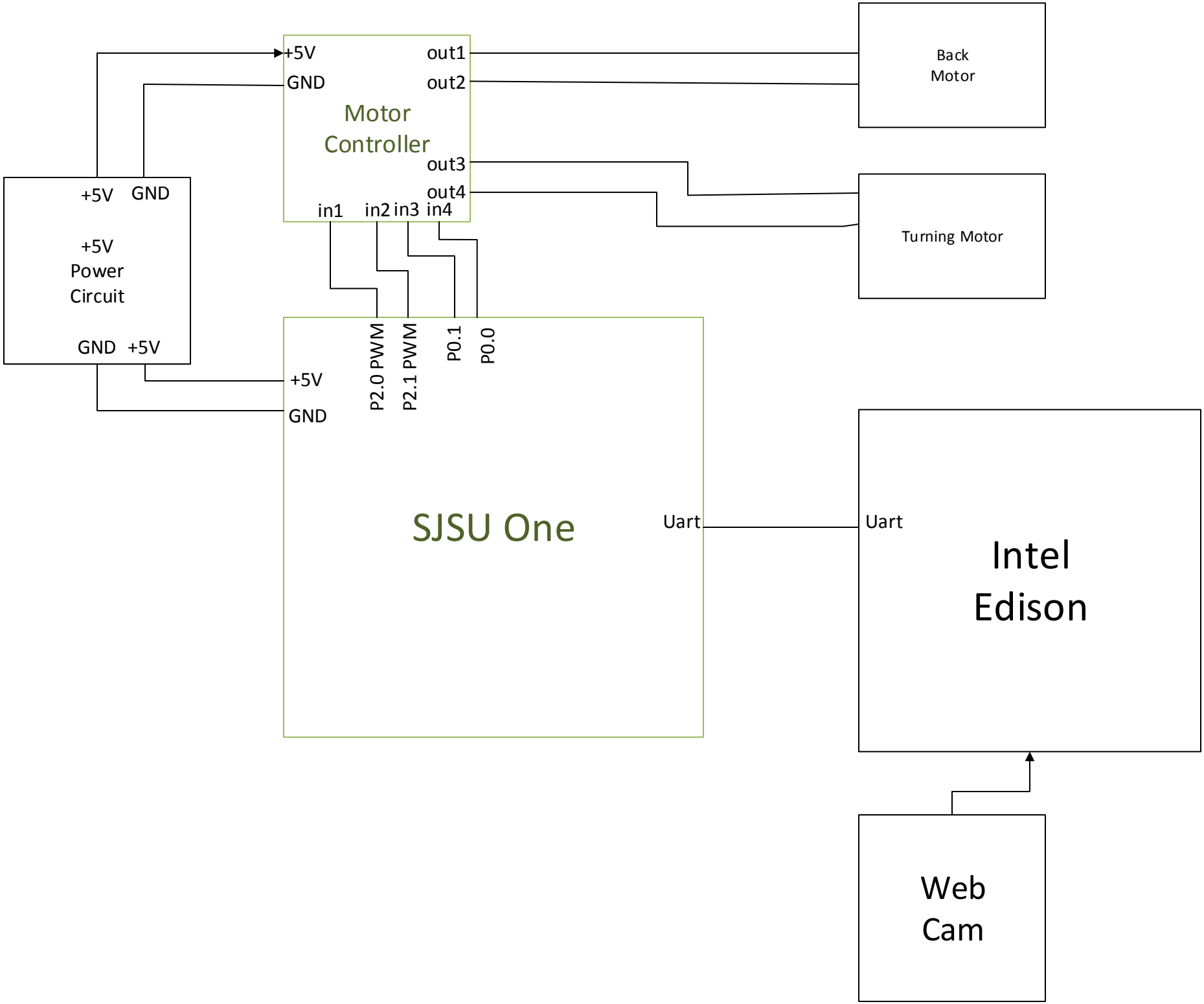
+5V
GND
Motor
Controller
out1
out2
out3
out4
in1
in2
in3
in4
Back
Motor
Turning Motor
+5V
GND
+5V
Power
Circuit
GND
+5V
+5V
GND
P2.0 PWM
P2.1 PWM
P0.1
P0.0
SJSU One
Uart
Uart
Intel
Edison
Web
Cam