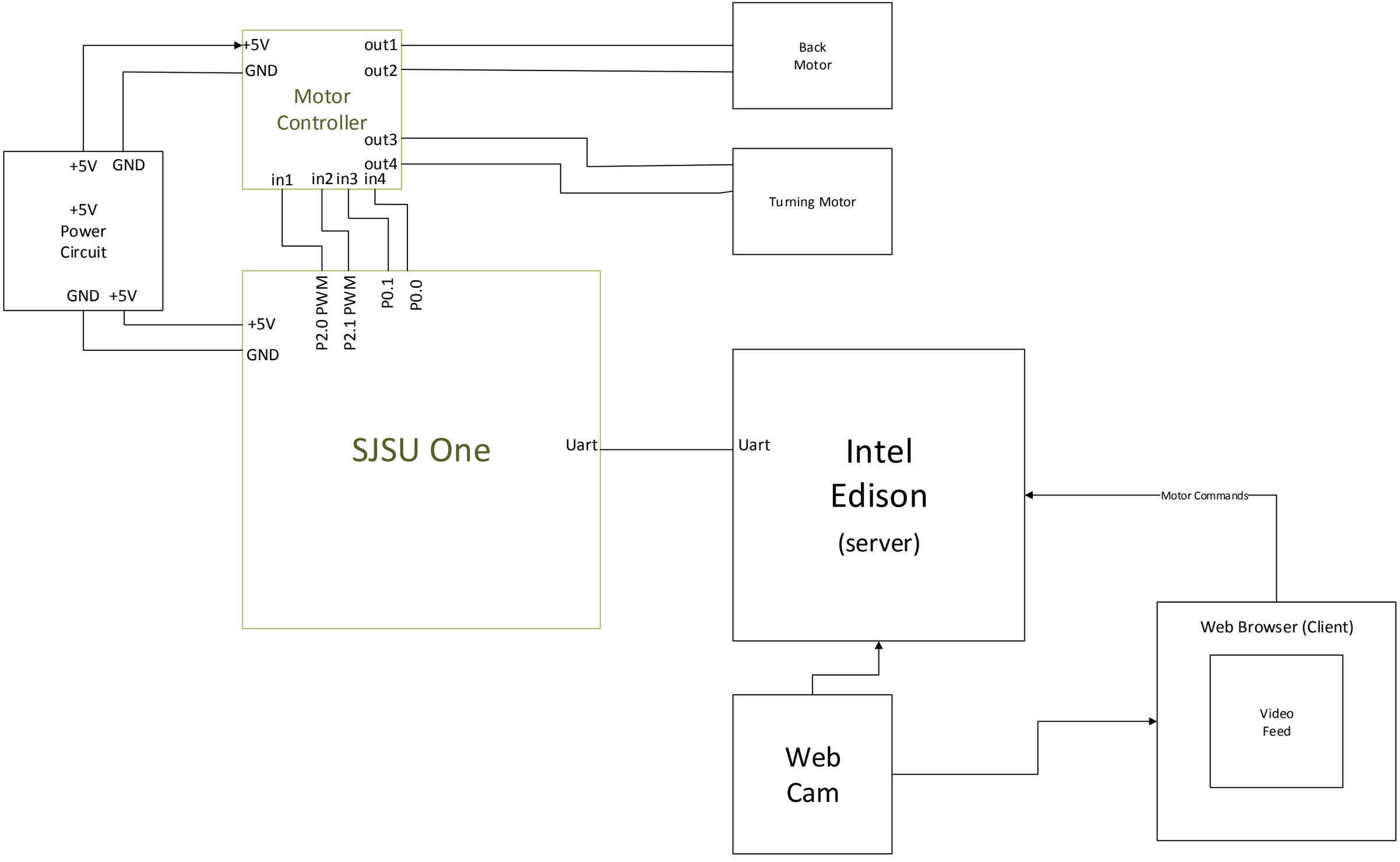
+5V
GND
out1
out2
Motor Controller
out3
out4
in1
in2
in3
in4
Back Motor
Turning Motor
+5V
GND
+5V Power Circuit
GND
+5V
P2.0 PWM
P2.1 PWM
P0.1
P0.0
+5V
GND
SJSU One
Uart
Uart
Intel Edison
(server)
Motor Commands
Web Cam
Web Browser (Client)
Video Feed